B8641002/04-2022

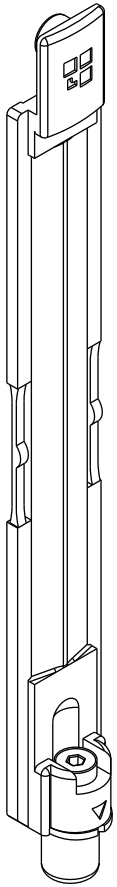

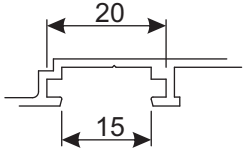

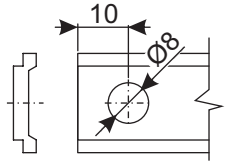

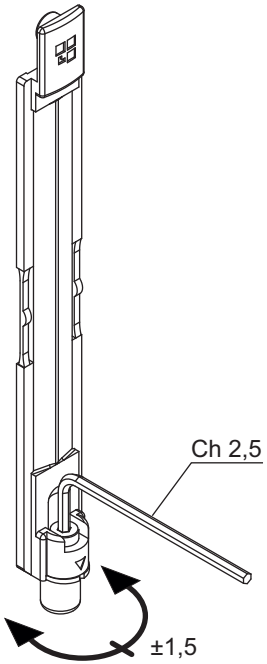

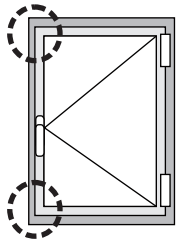

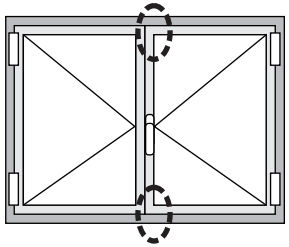

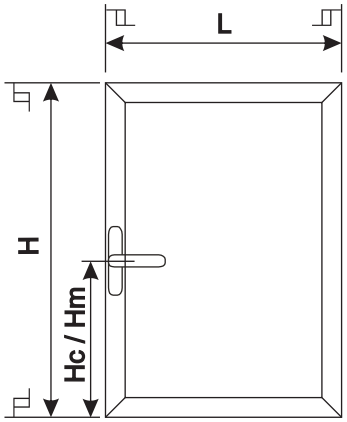

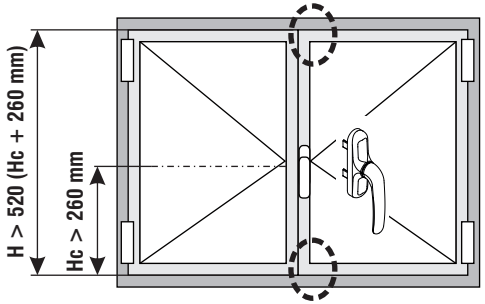

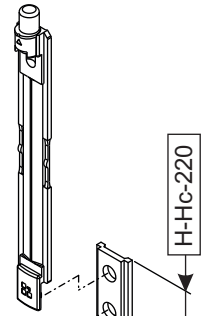

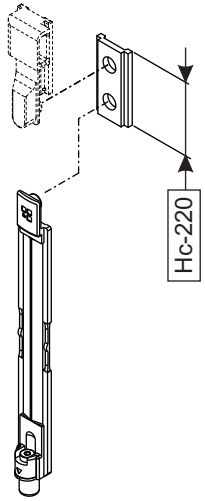

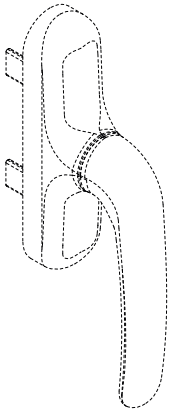

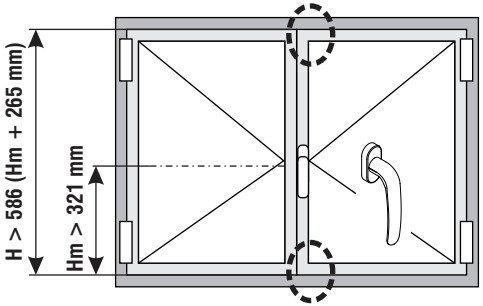

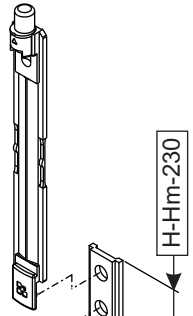

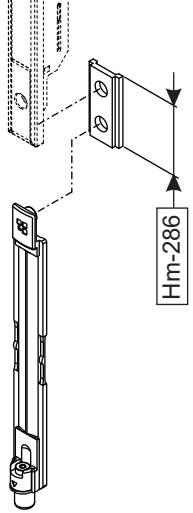

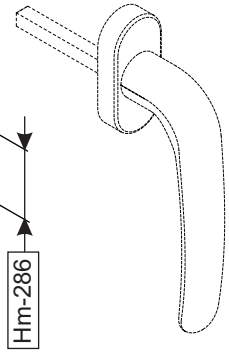

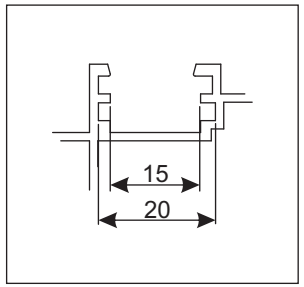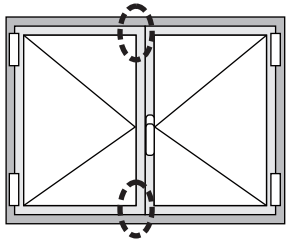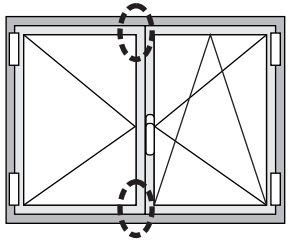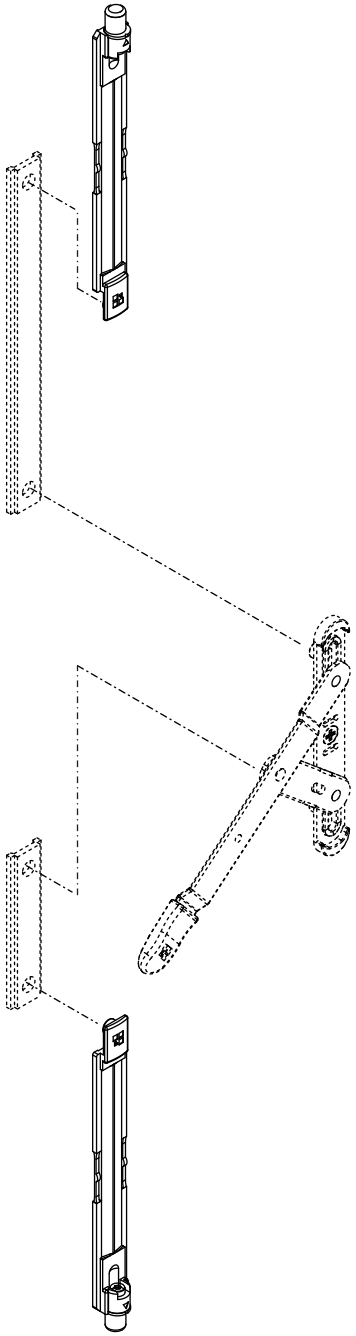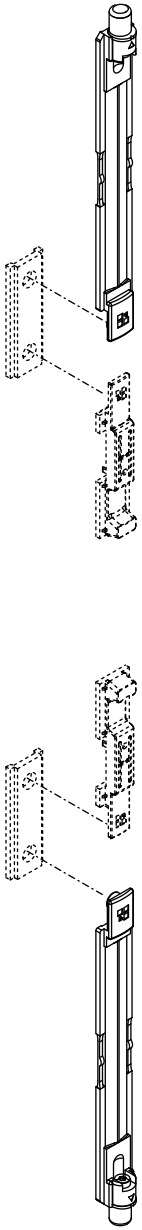
15
20