I05470000QN/07-2014

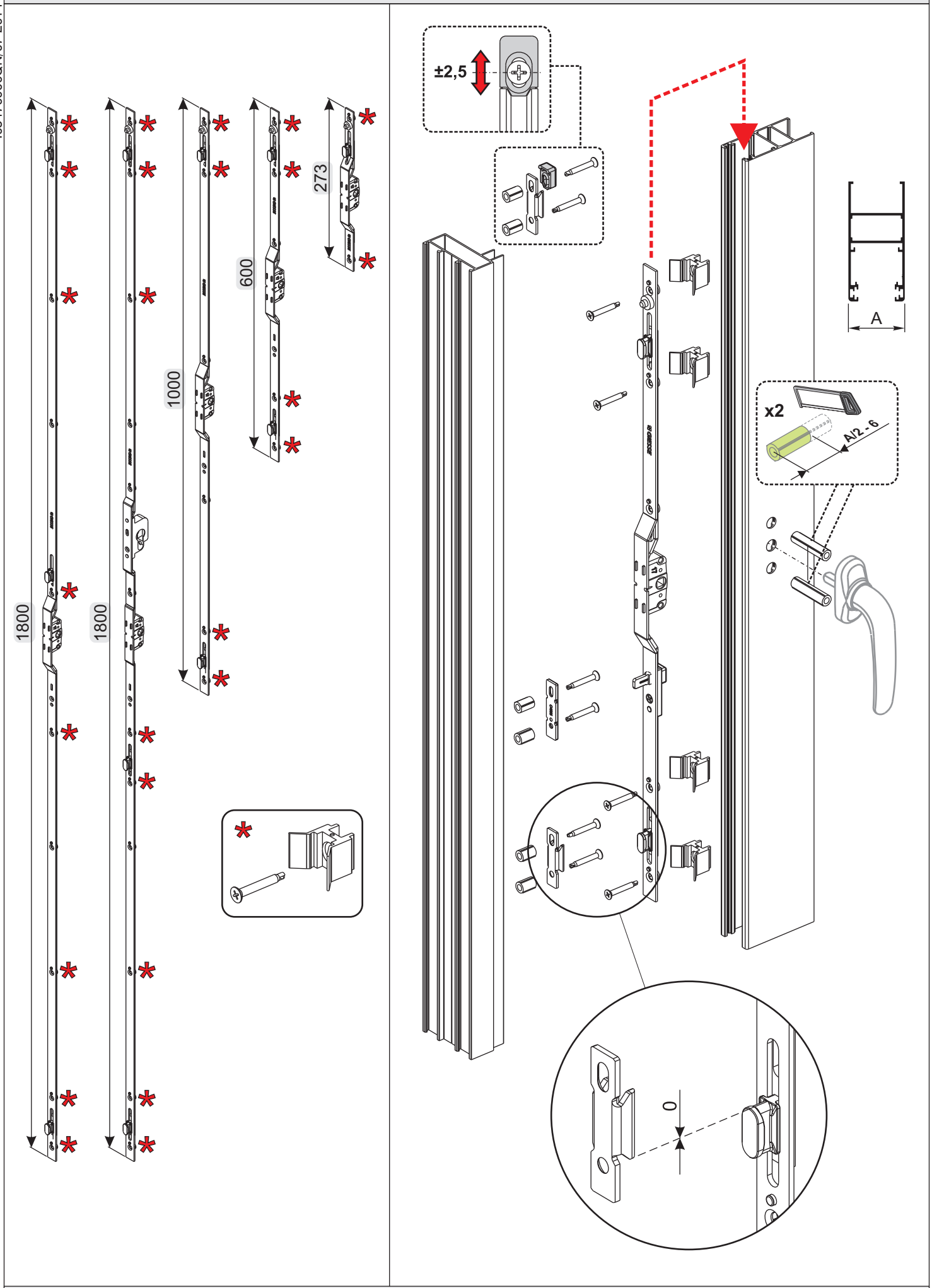

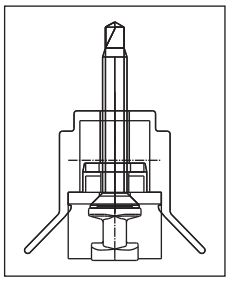

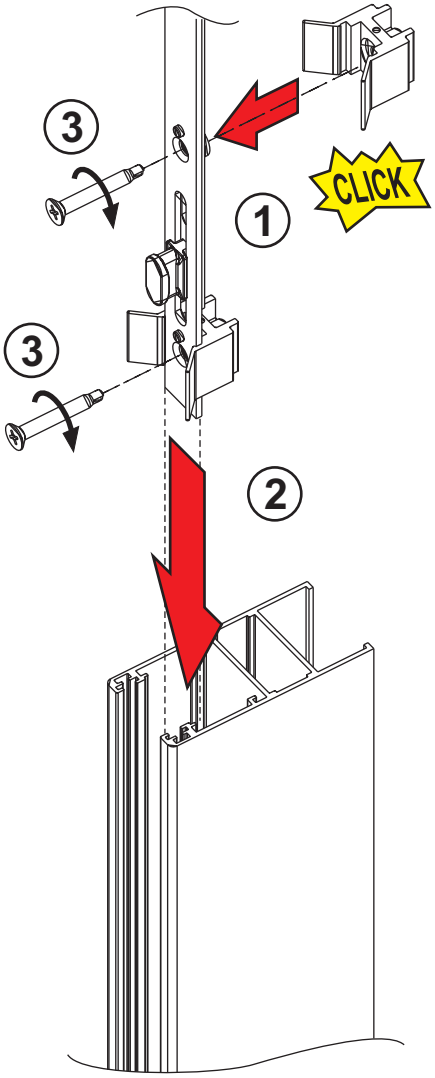
3
CLICK
1
3
2

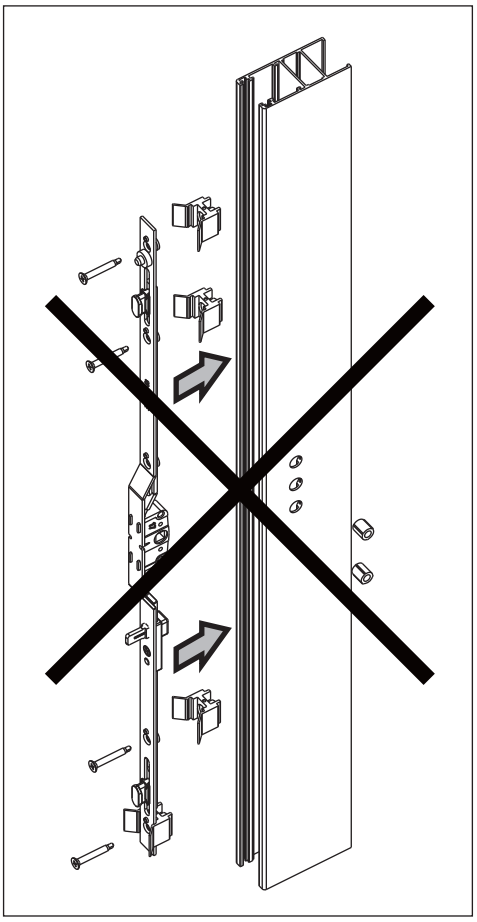

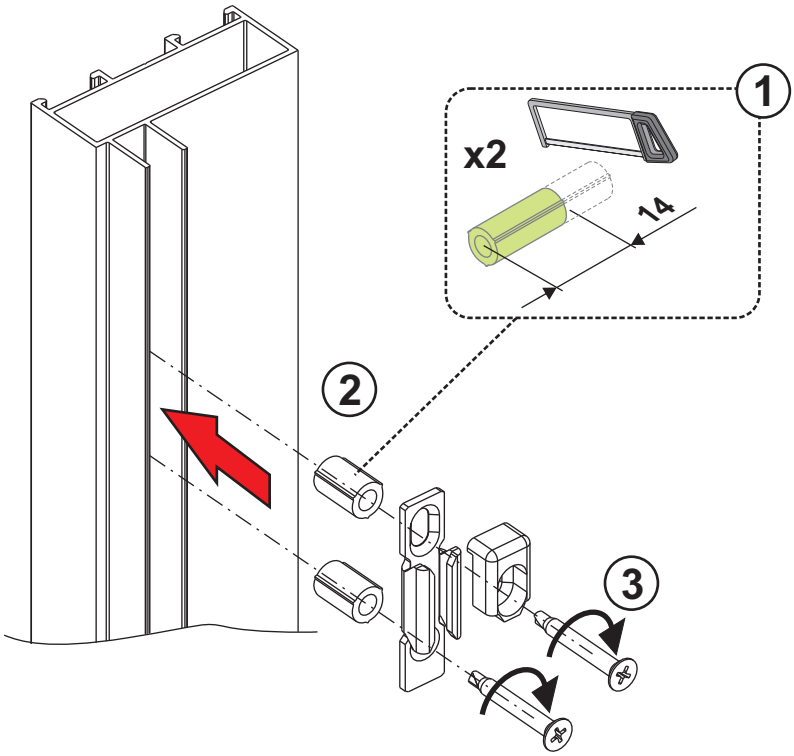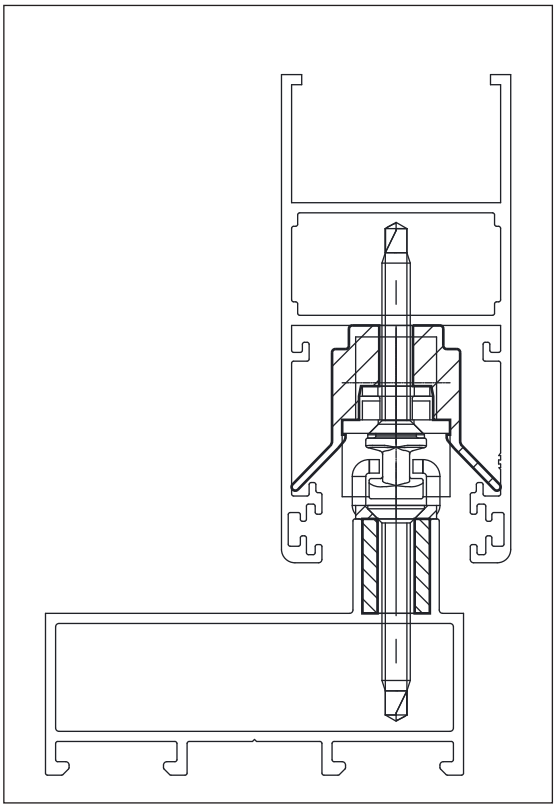
1
x2
14
2
3