UNICA SYSTEM CREMONE

Functions

Cremone with no internal components.
Depending on need, it can be transformed into a Cremone for inward opening, outward opening casement or tilt-and-turn by using the specific kits (also supplied complete with the lock points).

Online data sheet

Technical Features

The UNICA cremone mechanism is available in different versions and is supplied without the internal parts. The procedure for mounting them, contained in the customization kit, is for the window maker, but is quick and straightforward.
All Unica cremones have a fixing C/C distance of 104 mm.

Materials

Handle in die-cast aluminium
Cases and gear in die-cast zamak
Steel spring
Zinc plated steel screw
Shim in Hostaform

Example of mounting the tilt-and-turn window Cremone (01150N+04071N)

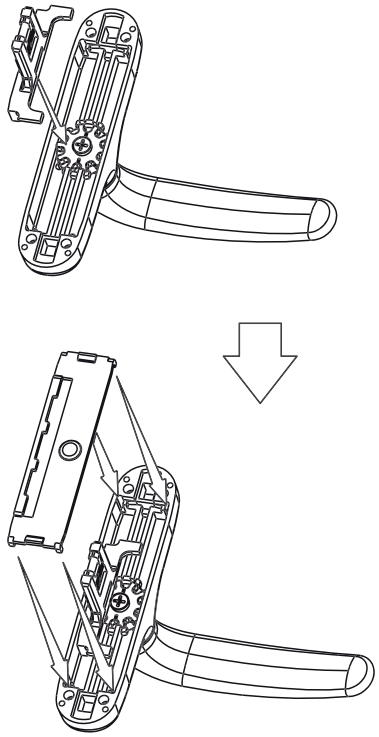

Example of mounting the Apex Cremone (01150N+02259)

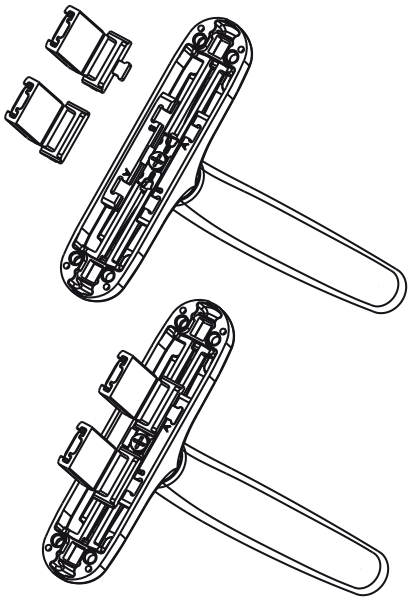

C/C distance machining 104 mm

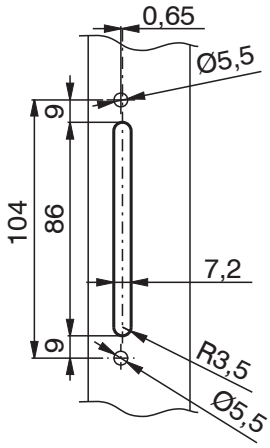

00963

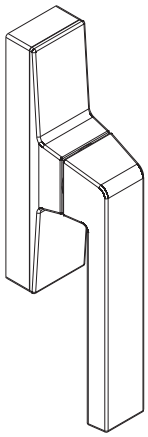

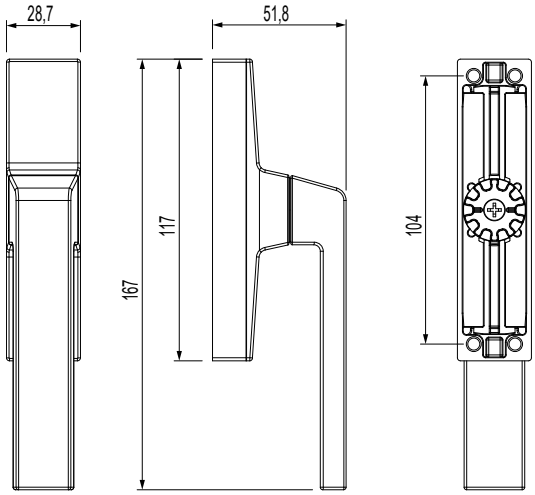

00966

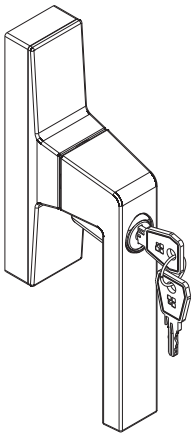

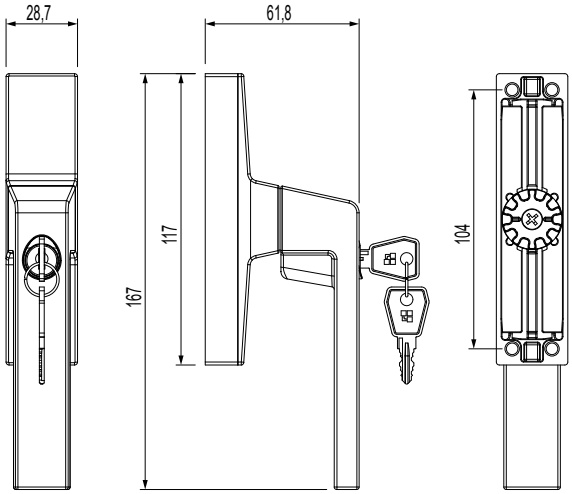

01063

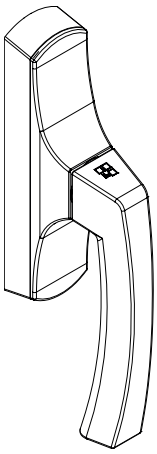

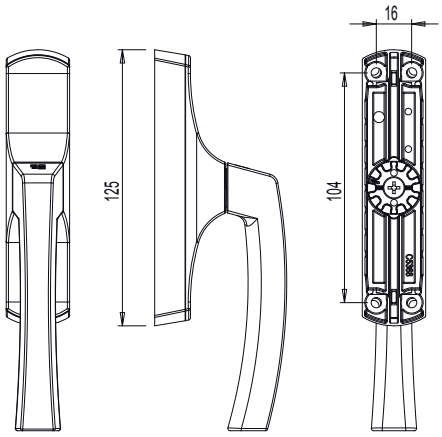

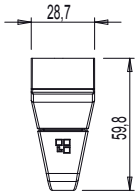

01125

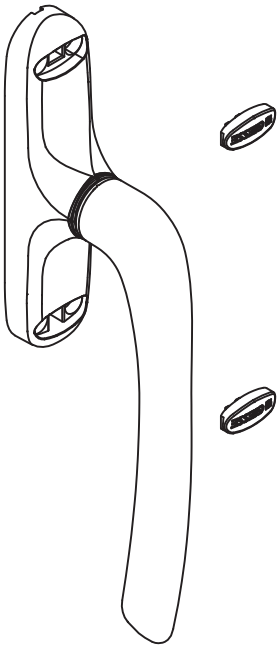

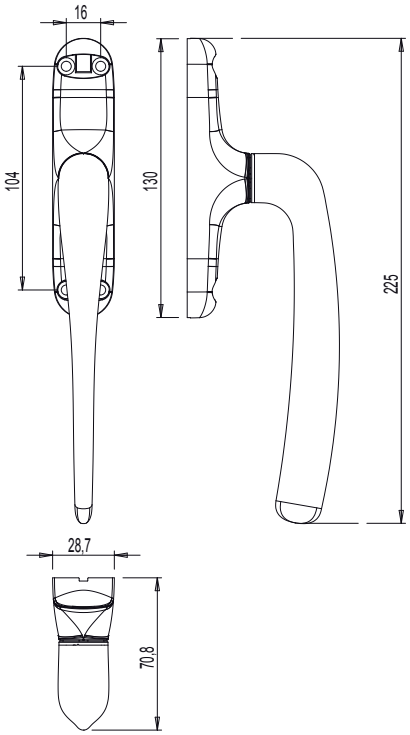

01126

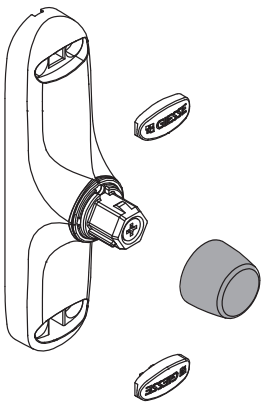

01129

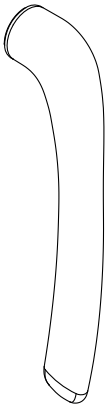

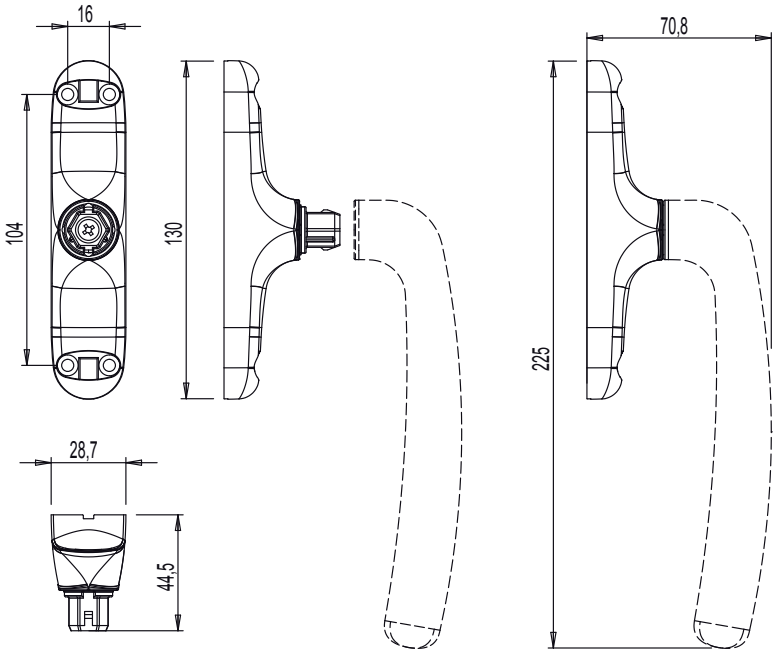

GIESSE

01150001

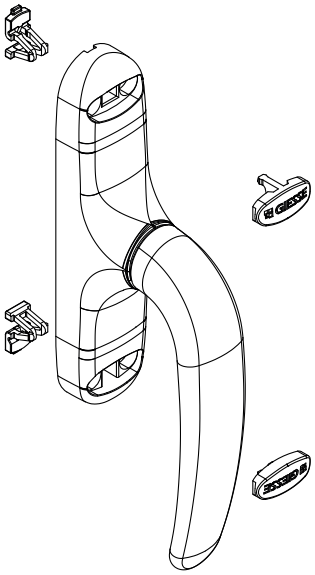

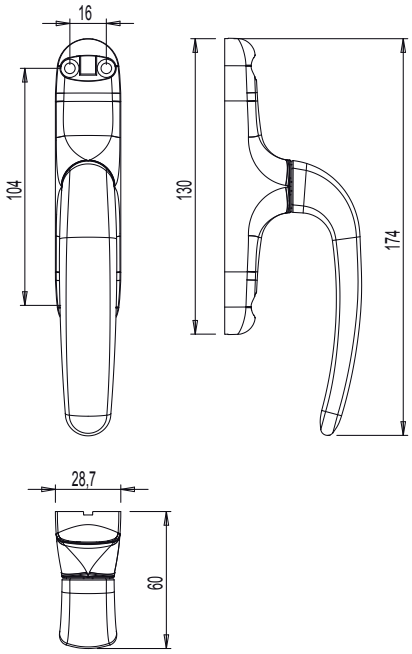

01151001

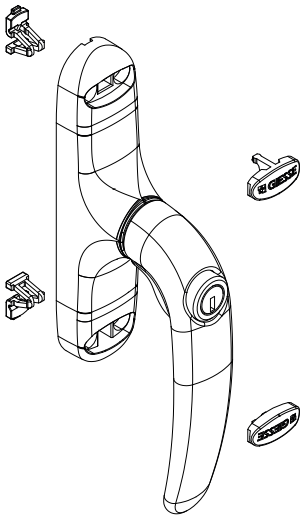

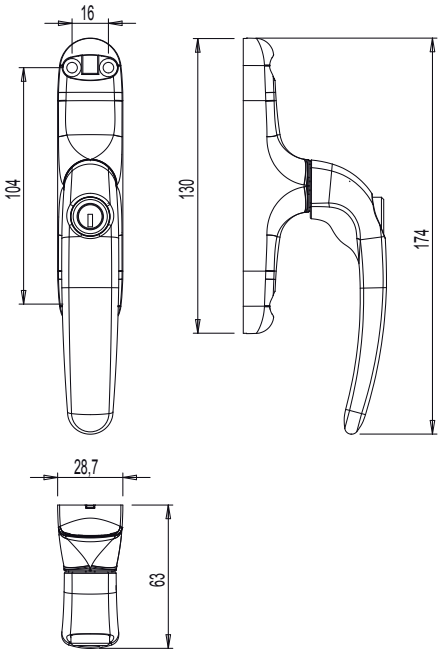

011691

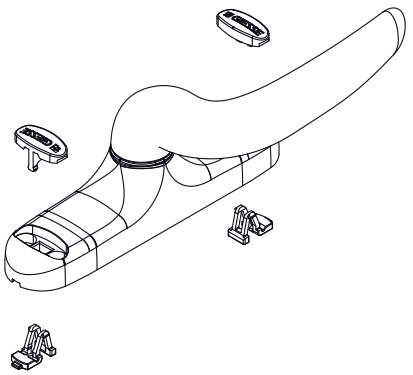

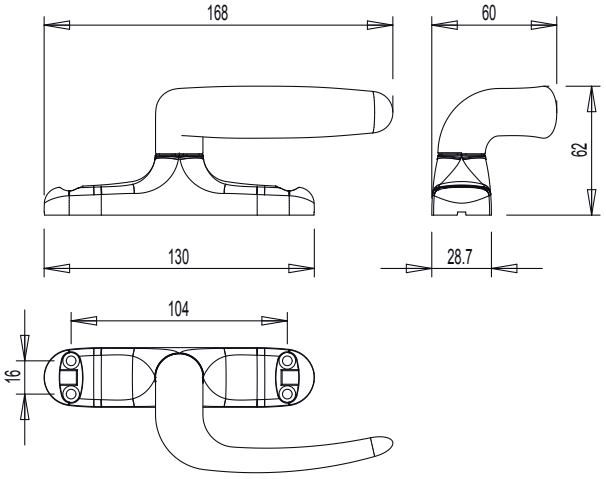

011692

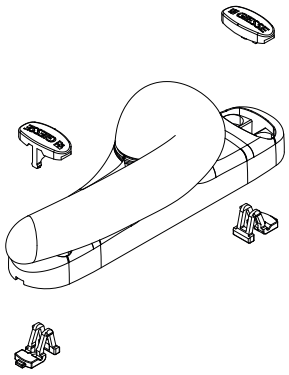

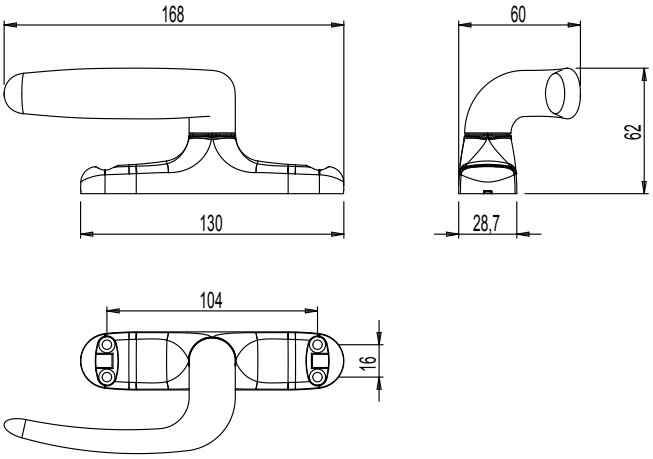

01230

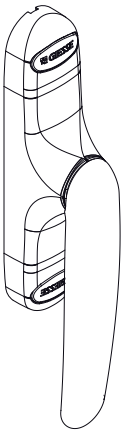

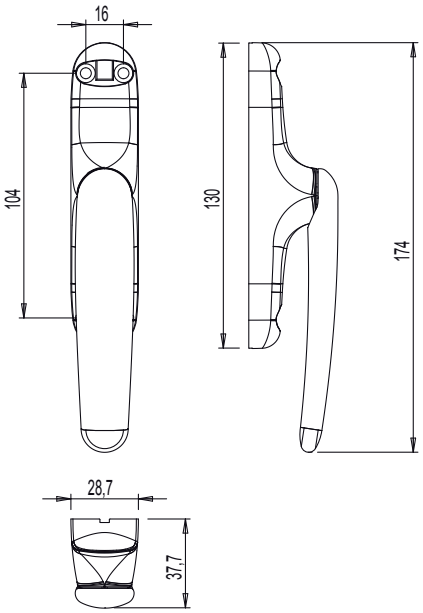

GIESSE

Item code	Description	PROFILE CROSS - SECTION	Hand	C/C distances	Base Raw	Anodised Elox	Painted	Trend/Gold Brass	Pieces per pack
00963	KORA 0-180 UNICA SYSTEM CREMONE	C001-C002-C003-C004-C005-C006-C007-C008-C009-C010-C012-C013-C014-C015-C016-C017		104 mm	X		X		10
00966	KORA KEY 0-180 UNICA SYSTEM CREMONE	C001-C002-C003-C004-C005-C006-C007-C008-C009-C010-C012-C013-C014-C015-C016-C017		104 mm	X		X		5
01063	ASIA OUTWARD 0-180° CREMONE	C001-C007-P002		104 mm	X		X		10
01125001	UNICA SYS. CREMONE PULL HANDLE L=172	C001-C002-C003-C004-C005-C006-C007-C008-C009-C010-C012-C013-C014-C015-C016-C017-P001-P002-P004-P005-P006-P007-P008-P009-P010		104 mm			X		10
01126	UNICA AWAY CREMONE	C001-C002-C003-C004-C005-C006-C007-C008-C009-C010-C012-C013-C014-C015-C016-C017-P001-P002-P004-P005-P006-P007-P008-P009-P010		104 mm			X		10
01129	PULL HANDLE FOR UNICA - AWAY	C001-C002-C003-C004-C005-C006-C007-C008-C009-C010-C012-C013-C014-C015-C016-C017-P001-P002-P004-P005-P006-P007-P008-P009-P010		-			X		10
01150001	UNICA SYSTEM CREMONE	C001-C002-C003-C004-C005-C006-C007-C008-C009-C010-C012-C013-C014-C015-C016-C017-P001-P002-P004-P005-P006-P007-P008-P009-P010		104 mm	X		X	X	10
01151001	UNICA KEY CREMONE	C001-C002-C003-C004-C005-C006-C007-C008-C009-C010-C012-C013-C014-C015-C016-C017-P001-P002-P004-P005-P006-P007-P008-P009-P010		104 mm	X		X	X	10
011691	UNICA OFFSET HANDLE CW2 CREMONE	-	Right	104 mm	X		X		5
011692	UNICA OFFSET HANDLE CW2 CREMONE	-	Left	104 mm	X		X		5
01230	UNICA CREMONE LOWERED HANDLE	C001-C002-C003-C004-C005-C006-C007-C008-C009-C010-C012-C013-C014-C015-C016-C017-P001-P002-P004-P005-P006-P007-P008-P009-P010		104 mm	X		X	X	5